Tax Liability Side Equivalence in Experimental Posted-O¤er Markets¤

Rainald Borck[y] Dirk Engelmann Wieland Müller
Hans-Theo Normann
Humboldt-Universität zu Berlin

January 20, 2000

Abstract

In theory, the incidence of a tax should be independent of which side of the market it is levied on. This principle of liability side equivalence underlies virtually all theories of tax incidence. Policy discussions, however, tend to place great emphasis on the legal division of tax payments. We use computerized experimental posted–o¤er markets to test liability side equivalence. We …nd that market outcomes are essentially the same when the tax is levied on sellers as when it is levied on buyers. Prices in both treatments are slightly above the competitive equilibrium. Thus we cannot reject liability side equivalence.

Keywords: Tax Liability, Posted O¤er Market, Experimental Economics
JEL-classi…cation: H22, C99

¤We wish to thank Tim Cason, Brit Großkopf, Georg Kirchsteiger and Manfred Königstein as well as participants of the ESA European Regional Meeting 1999 for helpful comments and suggestions. Financial Support from the TMR project "ENDEAR" of the European Commission is gratefully acknowledged.

[y]Corresponding author. Address: Department of Economics, Spandauer Str. 1, 10178 Berlin, Germany, Tel. +49-30-2093-5676, Fax +49-30-2093-5697, email: borck@wiwi.hu–berlin.de.

1 Introduction

One of the central results of tax incidence theory is that "the incidence of the tax does not depend on which side of the market it is levied" (Kotliko¤ and Summers, 1987, p.1046). This result – called liability side equivalence – holds for a variety of market structures under the assumption that prices are ‡exible and individuals maximize their material well being. In fact, this principle has been so widely accepted by economists that its empirical validity has (almost) never been tested.

This is rather surprising, given that the statutory incidence of taxes and other levies plays an important role in popular discussions. An article in The Economist on the Scandinavian countries argued that one reason for the large size of the welfare state was that "employers pay unusually heavy social-security contributions, while employees pay little – encouraging the impression that bene…ts cost nothing."[1] In Germany the introduction of the nursing care insurance (P‡egeversicherung) was accompanied by heated debates on how contributions should be split between employers and employees. In fact, just before the system was introduced, the division of contributions was the central matter of con‡ict (Hinrichs, 1995).[2] The weekly newspaper Die Zeit summarized the discussion in an article entitled "Useful illusion."[3] Proponents of scrapping the employer share of contribution argued mainly that if employees had to bear the entire contribution, they would be more aware of the full costs of insurance and therefore possibly opt for lower spending levels. In addition, it was argued that reducing the employer share would lower labor costs and therefore improve the competitive position of German …rms. Representatives of unions argued on the contrary that an equal split of the contributions would be fair and should therefore be incorporated.

This shows that popular impression seems to be based on the notion that the division of contributions between employers and employees matters for

[1] Frances Cairncross, Womb to tomb – The road to debt is paved with good intentions, The Economist, 5 Nov. 1994.

[2] Note that both employees and employers strongly resisted being "burdened" with the entire contribution (see Hinrichs, 1995).

[3] Udo Perina, Nützliche Illusion, Die Zeit, 2 June 1995.

economic outcomes. The division of those contributions also varies among countries, whereas economic theory would suggest that the choice should be dictated by minimization of administrative costs, hence, the formal incidence should probably rest with one side of the market only.

Statutory incidence may play a role if subjects are not fully rational. For instance, if individuals do not distinguish between gross and net earnings, they may be prepared to bear a larger share of the tax if they have to pay it. Alternatively, Kerschbamer and Kirschsteiger (1998) argue that statutory incidence a¤ects social norms. For instance, subjects may think that statutory incidence creates a moral obligation to bear the burden of the tax. If this is the case, then statutory incidence may a¤ect market outcomes.

In economic experiments, taxes have been most notable by their absence.[4] Quirmbach et al. (1996) present a general equilibrium analysis of tax incidence based on the Harberger model. Franciosi et al. (1995) use posted–o¤er markets similar to ours to analyze the e¤ect of fairness on prices. To this e¤ect, they study how switching from a pro…t tax to a sales tax a¤ects prices under designs that di¤ered with respect to whether or not seller profits were disclosed. Neither of these papers addresses the question whether statutory incidence matters.

The only experimental investigation of tax liability side equivalence that we are aware of is Kerschbamer and Kirschsteiger (1998). They let subjects play an ultimatum game (Güth et al., 1982), where in one treatment a tax has to be paid by the proposer and in the other by the responder.[5] Kerschbamer and Kirschsteiger (1998) …nd that the side on which the tax is levied bares a signi…cantly larger burden of the tax. They argue that in games where social norms a¤ect the outcome, statutory incidence may have real e¤ects.

Kerschbamer and Kirschsteiger use an ultimatum game as an example for a market that is not perfect, since they argue that political discussions of tax

[4] There are several experiments on tax evasion. See, for example, Robben et al. (1990) and Boso and Mittone (1997).

[5] In the ultimatum game, the …rst player (the proposer) o¤ers a division of a pie of …xed size to the second player (the responder). The responder can accept the division, in which case it is implemented, or reject it, in which case both players earn nothing.

liability side focus on such markets. Their results thus serve as a benchmark for defective markets. It is well known that, in the ultimatum game, the subgame perfect equilibrium is almost never played in experiments. Therefore, it is hard to interpret systematic deviations between di¤erent treatments. In other words, as long as one is not exactly sure what drives subjects' behavior in the game without taxes, it is hard to give a behavioral interpretation to any observed di¤erence in di¤erent tax treatments.

In any event, if tax equivalence fails, it must be due to subjects' misperceptions. For instance, Kerschbamer and Kirschsteiger argue that statutory incidence may a¤ect social norms based on gross earnings. But it is di¢cult to think of any such norm. For example, if subjects care about inequality, it would seem very unreasonable to think they judge equality on the basis of gross earnings instead of net earnings. One would then want to test in which environments such misperceptions may prevail.

We perform such a test. Namely, we analyze the incidence of taxes in experimental posted–o¤er markets. Compared to the ultimatum game this market form is closer to many markets where excise and consumption taxes are actually levied.[6] In contrast to the extreme institution of the ultimatum game we …nd that for this more realistic market institution, the theoretical proposition that e¤ective incidence is not a¤ected by statutory incidence, is not rejected by the data.

We proceed as follows. The next section presents the setup of the market used in the experiment and the experimental design. Section 3 presents the results of the experiment. The last section concludes with a discussion of our results.

[6] Strictly speaking the ultimatum game is a posted-o¤er market with only one seller and one buyer who bargain on the sale of a single unit of a good. In addition to the economic frame of posted-o¤er markets (see Ho¤man et al., 1994), multiple sellers and buyers distinguish our experiment from that of Kerschbamer and Kirschsteiger (1998).

2 Experimental design and procedures

Our experiment consists of ten standard posted-o¤er markets (for a survey, see Davis and Holt, 1995, ch.4). We also conducted two sessions where the same market was played as a double auction (see Section 3 below). Since double auctions are well known to converge to the competitive equilibrium very quickly (see Davis and Holt, 1995, ch.3), experimental data supporting the theory would not be much of a surprise in this case. By contrast, in posted-o¤er markets "adjustment to equilibrium tends to be from above and either converges to equilibrium more slowly [than double auctions] or does not converge at all" (Plott, 1982, p.1498). For this reason, testing tax liability equivalence in posted-o¤er markets provides a stronger test of the theory. The double auctions were simply conducted to check for robustness of the trading institution. Our two treatments di¤ered only with respect to the tax liability side. In one treatment the buyers were to pay the tax, in the other it were the sellers.

In each session three sellers and three buyers interacted. Sometimes two sessions were conducted simultaneously, but subjects were then informed that they only interacted in a group of six. The cost and demand structure underlying our posted-o¤er markets are shown in Figure 1. Note that each step on the cost and demand function consists of three units, one for each seller and each buyer. This implies that, at the competitive price range, $40 \cdot p \cdot 46$, twelve units are sold when there is no tax. More speci…cally, each seller sells and each buyer purchases exactly four units.[7] Payo¤s at a competitive price of 43 are 102 Taler (the experimental currency unit) for sellers and 130 Taler for buyers. This asymmetry to the advantage of the buyers was introduced to o¤set an expected e¤ect of the market power of sellers. Since subjects were unaware of the payo¤s of the other subjects, this asymmetry could not cause a price increase due to equity considerations. (Note that in Figure 1 the graphs are slightly o¤set to make the parts where they are actually parallel better visible.)

[7] We wanted to have a relatively large number of units being sold without a tax such that, after the introduction of the tax, the reduction of the number of units sold and the resulting reduction of payo¤s is not too drastic. Low payo¤s may frustrate subjects and induce non-sensical decisions (see Holt, 1985).

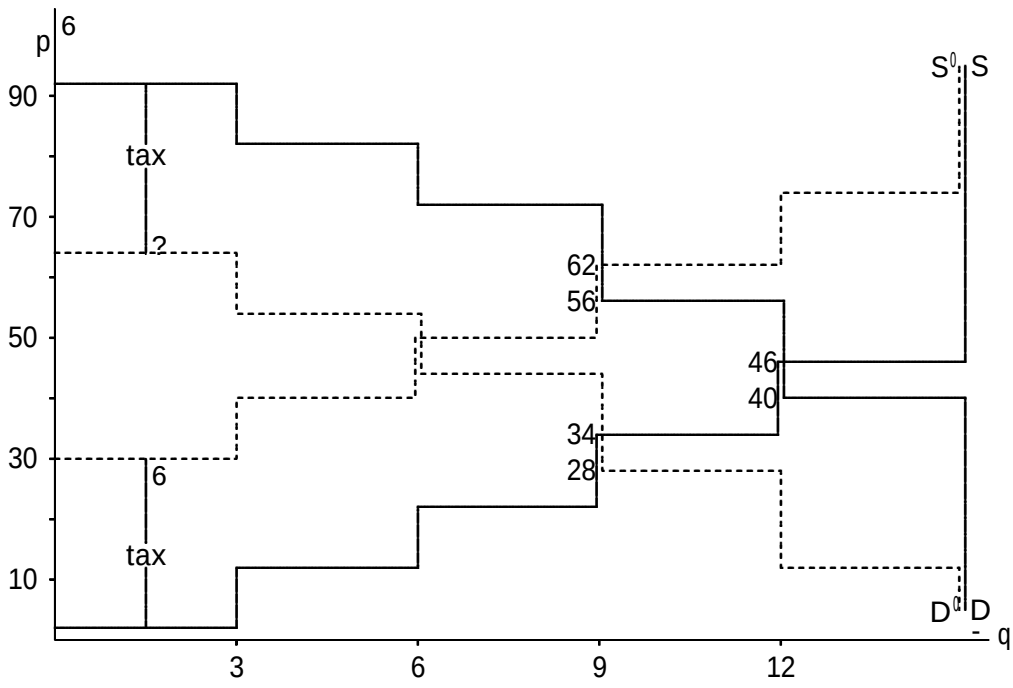

Figure 1: The experimental markets

Sellers could only post integer prices. Under the assumption that demand will be split equally between the sellers if posted prices are equal, there are six symmetric pure-strategy equilibria. Each equilibrium involves a price of the set [46; :::; 51] and …ve units o¤ered by each seller.[8] In these Nash equilibira, sellers will all sell four units but will sell less if they increase the price. Note, however, that for prices up to 56, buyers will also buy four units each.

After the …rst half of the experiment, a tax of 28 Taler was introduced. Now nine units are sold at competitive prices, three for each participant, no matter whether we have a buyer or a seller tax. The competitive price range is 56 ¡ 62 in gross prices and 28 ¡ 34 in net prices. The Nash equilibria (again assuming equal split of demand in case of a tie) are that each seller o¤ers four units. Symmetric gross equilibrium prices are in [62; :::; 66] and net prices are in [34; :::; 38], that is there are …ve symmetric pure-strategy

[8] Note that, with a continuous action space, there would be a unique Nash equilibrium in which all players post a price of 46 and o¤er …ve units.

Nash equilibria, in which sellers sell three units each. Buyers will buy three units each for prices up to 72 or 44, respectively. Payo¤s at a competitive price of 59 (or 31) are 57 Taler for sellers and 69 Taler for buyers.

The experiment was conducted at Humboldt-Universität zu Berlin in July 1999. In total ten sessions were conducted, …ve for each of the two treatments. The total of 60 subjects were recruited in undergraduate and graduate economics courses. Subjects were placed at isolated computer terminals. They were then given written instructions. These instructions were the same for both sellers and buyers and subjects were not informed about their role at that point. Then they could ask clarifying questions. The experiment was implemented in Z-Tree, a software developed by Fischbacher (1999). In total 24 periods were played in each session, twelve without taxes followed by twelve periods with a tax. Subjects were informed before the experiment started that after twelve periods a change in the market would be introduced and that another twelve periods would follow. No indication was made that this change would be the introduction of a tax.

At the beginning of each period sellers were informed about the costs for each individual unit they could sell. Both the maximum quantity a seller could o¤er and the maximal quantity a buyer could purchase were …ve. Buyers learned to be buyers in the …rst period by just being exposed to the waiting screen. Sellers o¤ered a contract by indicating a price and the maximal quantity they wanted to sell at this price.

After all sellers had either o¤ered a contract or had decided not to make an o¤er (which happened only in two out of 120 cases) the buyers were randomly ordered. This was conducted independently for each period. All participants were informed about the prices demanded and the corresponding seller numbers (though not the maximal quantity o¤ered).

At this stage the …rst buyer was informed about the valuations for all units he could buy. Then he could either decide not to buy at all or choose the seller from whom he wanted to buy and the maximal quantity he wanted to buy for the posted price. If this quantity was available from the chosen seller, the buyer received this quantity. However, if this was not the case,

the buyer received all the units o¤ered by the seller. He was then informed about the quantity he had received and for each unit about the pro…t (or loss) he had made. Then he could choose whether and how many units he wished to buy from another seller. At that stage he could only ask for a quantity such that the total quantity bought would not exceed …ve. If again the desired quantity was not available, the buyer received all units o¤ered and was informed about the quantity he had received as well as the pro…t made for each unit. He could then decide whether he also wanted to buy from the third seller.

After the …rst buyer had completed all transactions or had decided not to buy anything at all the second buyer ran through the same procedure, if there were any o¤ers left. All sellers who had sold the whole quantity were deleted from the list from which the buyers could choose. If the second buyer had completed all transactions or had decided not to buy anything and if not all sellers had sold everything, the third buyer could choose among the remaining contracts.

When all buyers were …nished or no more o¤ers were standing, all subjects received a feedback in the following form. They were informed which of the contracts o¤ered by the sellers were accepted and which were rejected (a contract was considered accepted if at least one unit was sold). Subjects were also given a summary about their trading. They were informed about the costs or values of all units they could have sold or bought, how many units they had sold or bought, the prices for which they had o¤ered or bought the units and the pro…ts they had made with the individual units as well as the total pro…t for that period.

After the twelfth period it was publicly announced that a tax of 28 Taler for each unit bought or sold would be imposed on one side of the market. In …ve sessions sellers had to pay the tax, in …ve sessions buyers. Then twelve periods were played exactly as before, except that at all stages where information was given concerning the costs or values of units sold the tax was also explicitly indicated (for the buyers or the sellers, depending on the treatment). Also, the tax was included in the computation and feedback of pro…ts per individual unit.

At the end of the total 24 periods, a questionnaire was to be …lled out by the subjects. They were asked for some biographical data as well as how they had come to their decisions. Finally they were informed about their total payo¤ in DM, which was paid immediately after the end of the experiment. The exchange rate was 1 DM for 60 experimental currency units.

3 Experimental results

Figure 2 and Table 1 summarize the experimental results. In Appendix A the results are presented for each of the ten sessions separately. Figure 2 shows graphically the evolution of the mean of those prices which resulted in contracts along with the number of units sold.[9] Stars (?) and solid triangles (**N**) were used to indicate these numbers for the treatment Seller Tax and Buyer Tax respectively. Note that prices for period 13 to 24 of the latter treatment are reported after adding the unit tax, i.e. shown are the e¤ective prices for buyers. In Figure 2 the range of competitive price predictions as well as competitive quantity predictions are indicated by dotted horizontal lines extending across periods 1 to 12 (…rst phase) and periods 13 to 24 (second phase). Although the …rst–phase situation was identical in both treatments, Figure 2 and Table 1 report the corresponding results separately for the two treatments. This was done to easily make visible the e¤ect the imposition of the tax has on …rst–period behavior in the second phase in comparison to last–period behavior in the …rst phase of the experiment.

Let us …rst consider the results of the …rst phase of the experiment. Inspecting Figure 2 or Table 1 we make the following observations:

(a) In both treatments average prices in period 1 are below the lower end of the competitive price range (40) and in periods 1 to 6 average prices in treatment Buyer Tax are higher than in treatment Seller Tax. (The latter, however, seems entirely due to the fact that in treatment Buyer Tax sellers (by chance) start in period 1 with on average higher prices.)

[9] As one can see in Table 1 the average prices per period do not di¤er to a large extent whether or not the prices are weighted with the number of units sold. The unweighted average prices are shown here.

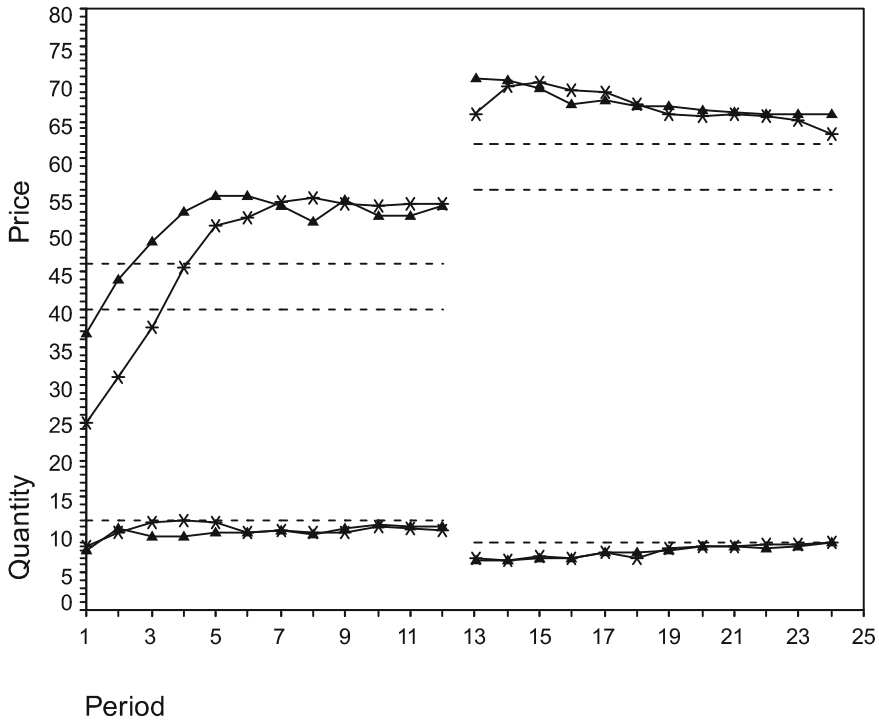

Figure 2: Summary of experimental results (?: Seller Tax, **N**: Buyer Tax)

(b) Crossing the range of competitive prices, mean prices in both treatments then quickly jump upward and stabilize at a common level of about 52 ¡ 53 which is distinctly above the upper end of the competitive price range (46).

(c) It seems fair to say that in periods 7 to 12 there is no trend whatsoever in the evolution of the mean prices in both treatments. Furthermore, for the sake of comparison, note that in the last period of the …rst phase, i.e. in period 12, the average price was with 53:9 respectively 53:7 virtually the same in both treatments.

(d) With regard to the level of units sold during the …rst phase of the experiment we observe that it is rather stable over the rounds. The average number of units is 10:45 which is slightly below the competitive quantity

prediction of 12 units. However, this is understandable given that prices occasionally exceed 56 such that the demand is lower than 12.

Next consider the second phase of the experiment. Here either sellers or buyers had to pay a tax of 28 Talers per unit. Inspecting Figure 2 or Table 1 again we make the following observations:

(a) The average price in period 13 is 65:9 (Seller Tax) and 70:8 (Buyer-Tax), i.e. in both treatments the price is above the upper end of the competitive price range (62). This is true for all periods of the second phase.

(b) In both treatments there is an overall downward trend in the evolution of the mean price in the second phase of the experiment. More precisely, whereas the mean price in treatment Buyer Tax stabilizes at a level of about 66 towards the end of the second phase, in treatment Seller Tax there is some further decrease in the last two periods.

(c) The overall downward trend in mean prices is accompanied by an upward trend in the evolution of the average number of units sold. However, whereas mean prices in both treatments are still supracompetitive in the last period, the number of units sold is exactly 9 in the last period in all of the ten sessions as predicted by the competitive equilibrium.

Let us now concentrate on the main question of this study: Does it make a di¤erence which side of the market the incidence of the tax is levied on? In the light of our experimental results the answer to this question is no. First of all note that there are hardly any di¤erences in average prices (across all periods of the second phase) which resulted in contracts (66.9 in treatment Seller Tax versus 67.6 in treatment Buyer Tax) and numbers of units sold (7.9 versus 7.8, see the last line in Table 1). This result can be statistically validated.

We conducted regressions using the tax liability side as a dummy and taking possible statistical dependence between the observations in one session into account. (Ignoring the possible dependence and considering all contracts as independent observations, the regressions would be equivalent to a T-test that ignores the dependence.) Considering accepted contracts of the last six periods (19 to 24) of all sessions (mean Seller Tax: 65.3,

	Seller Tax							Buyer Tax						
Period	Price	Min	Max	Var	weighted	Quant.	E¤.	Price	Min	Max	Var	weighted	Quant.	E¤.
		of PRICES			Price		in %		of PRICES			Price		in %
1	24.8	6	40	104.3	26.6	8.4	72.5	36.7	20	55	129.2	38.6	8.0	65.4
2	31.0	10	45	79.4	33.3	10.4	84.5	43.9	30	80	182.6	43.8	10.8	90.7
3	37.7	28	47	37.4	38.8	11.6	93.7	48.9	34	65	77.9	49.6	9.8	85.9
4	45.5	38	56	34.4	45.6	11.8	96.5	53.1	40	70	64.7	52.2	9.8	83.3
5	51.1	42	60	32.4	50.6	11.6	92.9	55.0	40	66	52.8	54.5	10.2	87.8
6	52.2	43	60	26.7	52.2	10.4	86.8	55.1	47	70	45.8	53.4	10.2	86.9
7	54.4	47	60	11.8	54.4	10.6	92.0	53.8	35	65	57.7	53.3	10.6	88.9
8	54.9	52	58	4.7	54.5	10.4	90.0	51.8	15	66	139.4	53.7	10.0	86.1
9	54.2	50	60	8.3	53.8	10.2	86.2	54.5	47	66	25.4	53.9	10.8	92.2
10	53.9	46	61	10.8	53.4	11.0	93.4	52.6	46	60	18.0	52.5	11.4	93.1
11	53.9	47	62	16.6	53.2	10.8	91.5	52.3	46	61	17.8	52.1	11.2	94.0
12	53.9	48	62	18.6	53.2	10.6	88.0	53.7	48	65	28.8	52.3	11.0	90.1
Mean	47.3	38.1	55.9	32.1	47.5	10.6	89.0	50.9	37.3	65.8	70.0	50.8	10.3	87.0
13	65.9	51	82	139.7	65.9	7.0	77.5	70.8	54	85	96.3	69.0	6.6	75.3
14	69.6	60	80	45.3	69.8	6.6	70.0	70.6	62	77	27.8	70.1	6.6	66.7
15	70.1	60	80	33.2	69.7	7.2	79.3	69.4	63	76	22.2	69.0	6.8	74.7
16	69.1	62	75	24.1	69.0	7.0	78.1	67.2	62	74	18.6	67.5	7.0	74.3
17	69.0	62	74	17.7	68.6	7.6	86.1	67.8	61	74	19.6	67.0	7.8	83.3
18	67.3	62	73	17.0	67.4	7.0	74.5	67.1	62	74	21.0	66.3	7.6	84.6
19	66.1	55	73	31.9	66.2	8.2	87.2	67.0	61	73	15.1	66.5	8.0	85.6
20	65.8	60	71	12.7	65.9	8.6	89.4	66.5	60	71	14.3	66.4	8.6	90.0
21	66.1	61	72	10.6	65.8	8.6	93.4	66.2	59	70	13.5	66.0	8.6	92.2
22	65.6	62	70	7.5	65.6	8.8	92.3	66.1	59	70	14.8	65.9	8.2	89.0
23	65.1	61	70	8.0	65.0	8.8	93.4	66.0	59	70	13.1	66.0	8.6	91.2
24	63.4	60	70	8.6	63.8	9.0	94.6	66.0	60	70	10.6	66.0	9.0	92.8
Mean	66.9	59.7	74.2	29.7	66.9	7.9	84.7	67.6	60.2	73.7	23.9	67.1	7.8	83.3

Table 1: Summary of experimental results (weighted prices in parentheses).

mean Buyer Tax: 66.3), we cannot reject the null hypothesis of no in‡uence of the liability side (p = :665). Furthermore, this rather small di¤erence is primarily caused by the last period. Including only periods 19 to 23 (mean Seller Tax: 65.7, mean Buyer Tax: 66.3) and using the same test, we obtain a level of signi…cance p = :786:[10] For the last period alone the mean prices that resulted in contracts are 63.4 (Seller Tax) and 66.0 (Buyer Tax). This di¤erence is not signi…cant either (p = :177). For all other of the last six periods the di¤erence between the two treatments is smaller and far from signi…cant. Furthermore, the minimal and maximal prices di¤er only marginally between the two treatments in the last …ve periods, though the variance of prices is slightly higher in the treatment Buyer Tax. It is remarkable that the introduction of the tax does not cause much disturbance in the market. Although the prices of accepted contracts di¤er in the …rst period after the introduction of the tax (65:9, Seller Tax, and 70:8; Buyer Tax), this di¤erence is also not signi…cant (p = :165).[11] The increase in prices through the introduction of the tax (12:0, Seller-Tax, and 17:1; Buyer Tax) is close to the increase in equilibrium, which is 16. Furthermore, the di¤erence between the two treatments disappears almost completely in the next period.

The e¢ciency in the periods with tax is nearly equal in both treatments, being slightly higher in the treatment Seller Tax (84.7) than in the treatment Buyer Tax (83.3). The di¤erence is even smaller than the corresponding di¤erence for the periods without tax (89.0 versus 87.0), so that it can rather be attributed to chance or to better performance by the subjects in the …rst treatment than to a treatment e¤ect.

The average duration of a session was 75 minutes. On average subjects earned DM 31.00 (DM 34.13 for the sellers and DM 27.88 for the buyers). In the periods with taxes the relative earnings of sellers and buyers are roughly

[10] Even if we ignore the possible dependence and consider all prices that resulted in contracts in periods 19 to 23 as independent observations, we obtain a level of signi…cance of only p = :319:

[11] 95% con…dence intervals for the coe¢cient of the treatment dummy are as follows. Periods 19 to 24: [¡3:82; 5:71], periods 19 to 23: [¡4:39; 5:63], period 24: [¡1:40; 6:54], period 13: [¡2:45; 12:30]:

equal in both treatments (DM 12.71 to DM 8.62 in treatment Seller Tax and DM 12.61 to DM 8.39 in treatment Buyer Tax). Hence the allocation of social wealth is not in‡uenced by the side which the tax is levied on.

In the two double auction sessions there is not a treatment e¤ect either. Both with and without tax, prices in treatment Seller Tax are close to the upper end of the competitive price range whereas in treatment Buyer Tax prices are slightly below the lower end of the competitive price range. The di¤erence between the prices in both treatments after introducing the tax is of the same magnitude as it is in last two periods without tax. Note that this di¤erence is opposite to what could be expected if tax liability side mattered, namely higher prices in treatment Buyer Tax.

4 Discussion

We presented an experiment on tax liability side equivalence in posted-o¤er markets. Prices are above the competitive price range, in both treatments as well as after some experience in the …rst phase without taxes. However, they are within the range of prices where demand is equal to equilibrium demand. Such supracompetitive prices frequently occur in posted-o¤er markets and might be attributed to collusion of the sellers. Contrary to Kerschbamer and Kirchsteiger (1998) we do not …nd a signi…cant in‡uence of the tax liability side. Therefore, we conclude that in posted-o¤er markets, the legal distinction which side of the market has to pay a tax has no in‡uence on market outcomes.

Kerschbamer and Kirchsteiger use their experiments to draw some policy conclusions. In particular, they argue that statutory tax incidence may affect the performance of markets where social norms can a¤ect the outcome. For instance, if the characteristics of a good are not completely speci…ed before trade takes place, social norms may prevent market clearing. The ultimatum game represents such a market form. Kerschbamer and Kirchsteiger cite labor markets as an example where social norms matter and, hence, statutory incidence may have e¤ects in …eld markets.

We have used posted-o¤er markets as an example of a market which functions reasonably well but not perfectly, and found that incidence theory is con…rmed. From a policy perspective, the question is: Does statutory tax incidence matter? We do not think that the ultimatum game is general enough as an imperfect market to draw policy conclusions for, say, labor markets. From a methodological viewpoint, we can think of a continuum of market forms, ranging from those that do not work well (like the ultimatum game) to those that converge very quickly, such as double auctions. Somewhere along this continuum might be a line which separates those markets where statutory incidence matters from those where it does not. Future research may help us draw this line.

References

[1] Bosco, L, and L. Mittone. 1997. Tax evasion and moral constraints: Some experimental evidence. Kyklos, 50, 297-324.

[2] Davis, D., and Ch. Holt. 1995. Experimental Economics, Princeton University Press.

[3] Fischbacher, U. 1999. Z-Tree: Zurich Toolbox for Readymade Economic Experiments, Working paper Nr. 21, Institute for Empirical Research in Economics, University of Zurich.

[4] Franciosi, R., P. Kujal, R. Michelitsch, V. Smith, and G. Deng. 1995. Fairness: E¤ect on temporary and equilibrium prices in posted-o¤er markets. Economic Journal, 105, 938–950.

[5] Güth, W., R. Schmittberger, and B. Schwarze, 1982. An experimental analysis of ultimatum bargaining, Journal of Economic Behavior and Organization, 3, 367-88.

[6] Hinrichs, K. 1995. Die soziale P‡egeversicherung – eine institutionelle Innovation in der deutschen Sozialpolitik. Staatswissenschaften und Staatspraxis, 6, 227-259.

[7] Ho¤man, E., K. McKabe, K. Shachat, and V. Smith. 1994. Preferences, property rights, and anonymity in bargaining experiments. Games and Economic Behavior, 7, 346-380.

[8] Holt, Ch. 1985. An experimental test of the consistent-conjecture hypothesis. American Economic Review, 75, 314-25.

[9] Kerschbamer, R. and G. Kirchsteiger. 1998. Theoretically robust but empirically invalid? An experimental investigation into tax equivalence. Mimeo, University of Vienna.

[10] Kotliko¤, L. J. and L. H. Summers. 1987. Tax incidence. In A. J. Auerbach and M. Feldstein (eds.), Handbook of Public Economics, 1043–1092. Amsterdam: Elsevier.

[11] Plott, Ch. 1982. Industrial organization theory and experimental economics. Journal of Economic Literature, 20, 1485-1527.

[12] Quirmbach, H. C., C. W. Swenson, and C. C. Vines. 1996. An experimental examination of general equilibrium tax incidence. Journal of Public Economics, 61,337–358.

[13] Robben, H.S. et al. 1990. Opportunity and tax evasion: An experimental approach. Journal of Economic Behavior and Organization; 14, 353-61.

Appendix: Further Data

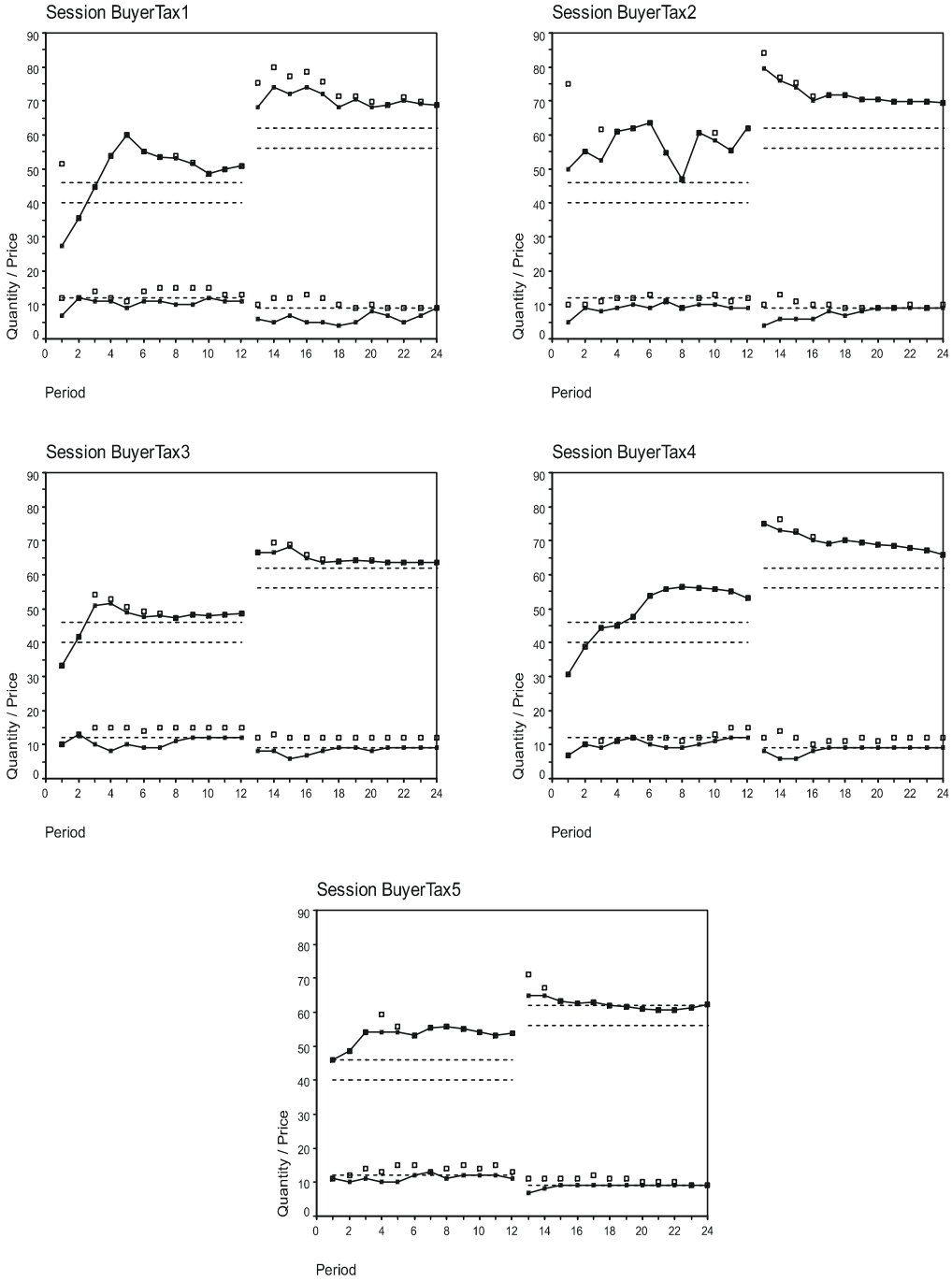

Figure 3: Evolution of prices and units (o¤ered and sold) in the treatment BuyerTax (¥: mean of prices which resulted in contracts and number of units sold, ¤: mean of all prices and units o¤ered).

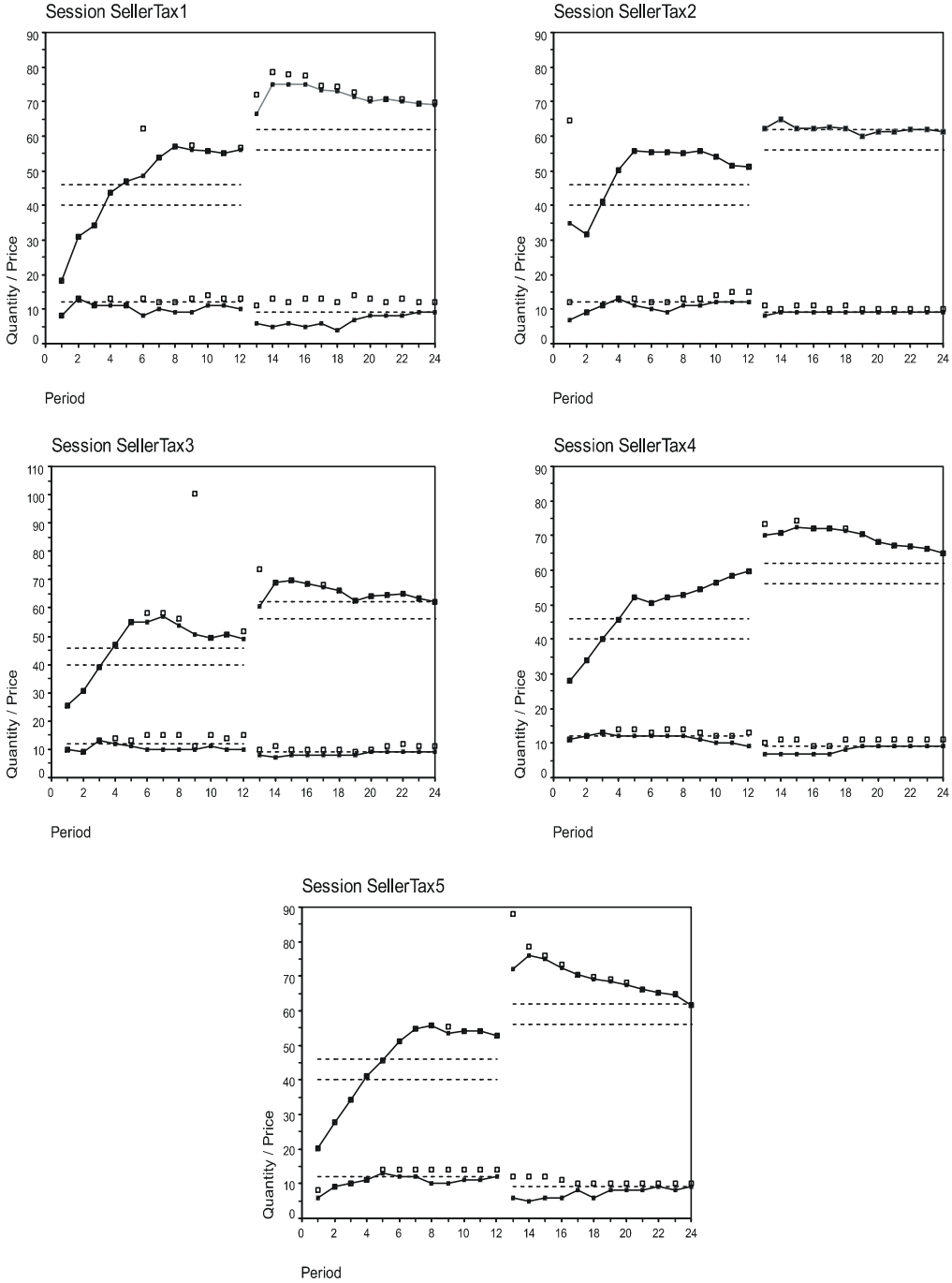

Figure 4: Evolution of prices and units (o¤ered and sold) in the treatment SellerTax (¥: mean of prices which resulted in contracts and number of units sold, ¤: mean of all prices and units o¤ered).